RoHS

REV.	ECN.NO.	DR.	DATE.
A	-	JOHN	2008/12/02

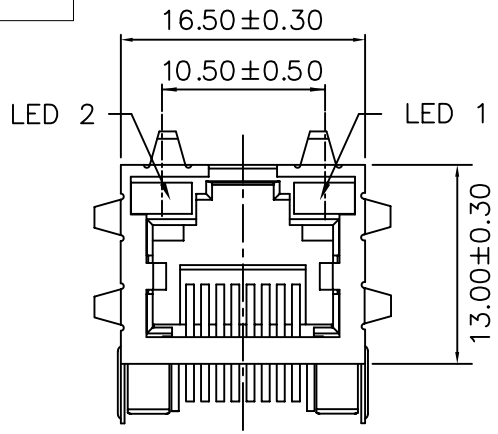

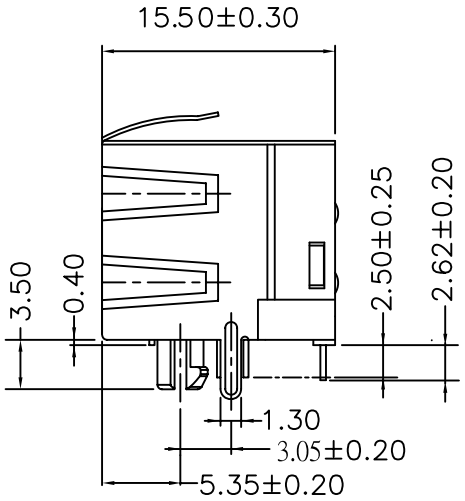

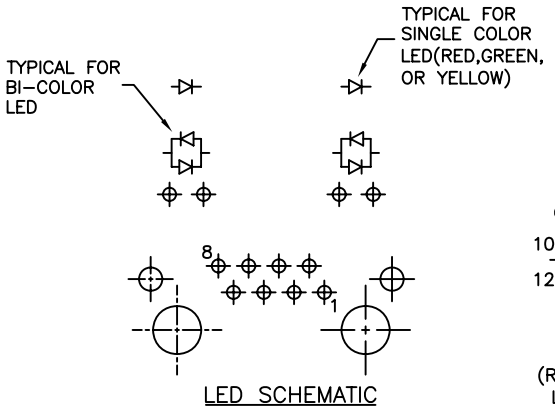

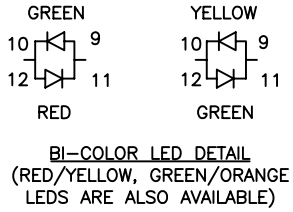

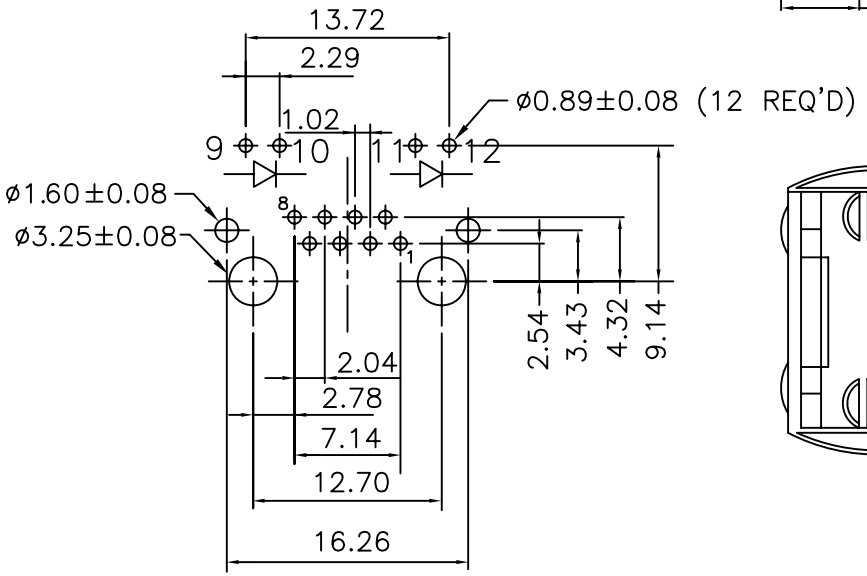

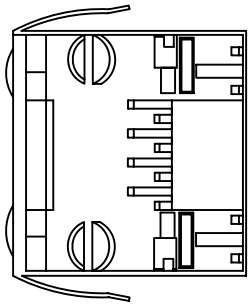

NOTE:
1.MATERIAL:
HOUSING: PBT UL94V-0, COLOR: BLACK.
CONTACT: PHOSPHOR BRONZE, T=0.35 mm
SHELL: COPPER ALLOY,T=0.25 mm
2,PLATING:
CONTACT: GOLD FLASH ON CONTACT AREA, TIN PLATED ON SOLDER TAIL, NICKEL UNDERPLATE OVER ALL.
SHELL: TIN / NICKEL PLATED.
3.ELECTRONICAL SPECIFICATION:
CURRENT RATING: 1.5 AMP
VOLTAGE RATING: 150 V AC
CONTACT RESISTANCE: 20 MILLIOHMS MAX.
INSULATION RESISTANCE: 500 MEGOHMS MIN.
DIELECTRIC WITHSTANDING VOLTAGE: 1000 VDC.

PCB LAYOUT

Title: RJ45 WITH LED, R/A, DIP		豪國興業股份有限公司 HAOGUO XING YE SHARE CO.,LTD.	
tolerances: linear .x ±0.38, .xx ±0.25, .xxx ±0.13; angles x.° ±3°, .x° ±, .xx° ±	app.	units ☑ mm ☐ inch	part no: THRJ-880SE03-LED
	chk.	size A4	dwg no. NE0_001
	dr. JOHN		
projection; revision. A	date. 2008/12/02	scale 1:1	sheet 1/1

ASSEMBLE DRAWING