REV.	DESCRIPTION	DATE	DWN	APVD
R2	Modify	04FEB2013	John	
R3	Modify	17JUL2013	John	

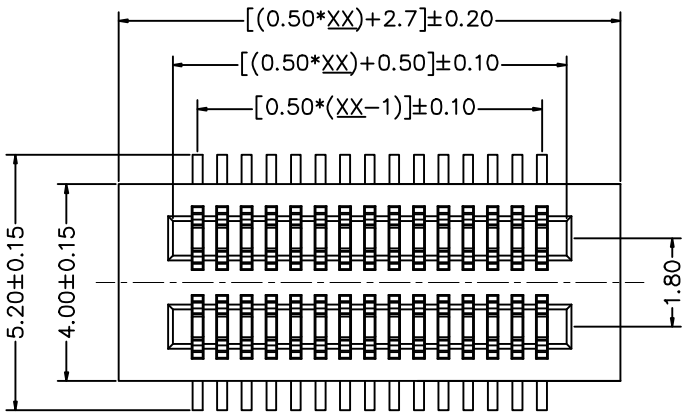

Electrical
Voltage:50V AC(RMS)/DC
Current:0.5A AC(RMS)/DC
Contact Resistance:50m Ω max
Insulation Resistance:50M Ω min
Dielectric Withstanding Voltage:250VAC/RMS
Operating Temp:-20℃～+85℃
Materials
Housing:High temperature Plastic UL 94V-0
Terminal:Copper Alloy
Plating : Gold Flash

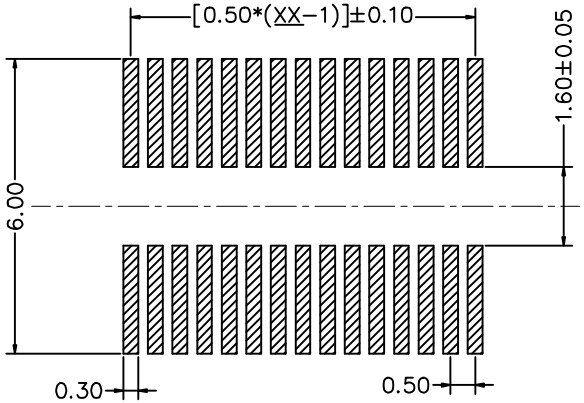

RECOMMENDED P.C.BOARD
PATTERN DIM(REF)

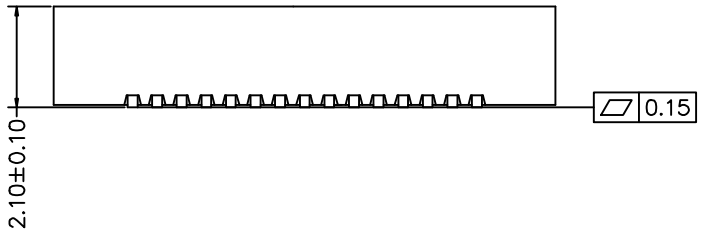

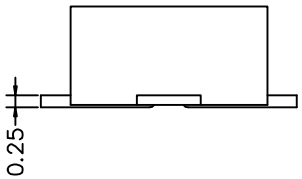

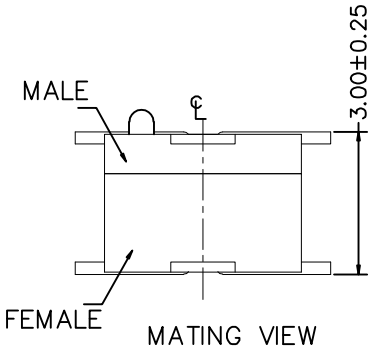

MATING VIEW
(MATING HEIGHT)

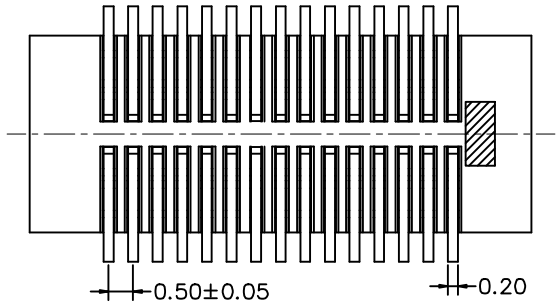

P/N:J13−0035−XX
PIN NO
2*01−>01
2*02−>02
2*03−>03
2*04−>04
2*05−>05
2*50−>50

J13−0035−XX
PART NUMBER

TOLERANCES UNLESS OTHERWISE SPECIFIED: 0 PLC ± − ; 1 PLC ±0.3 ; 2 PLC ±0.2 ; 3 PLC ±0.15 ; 4 PLC ± − ; ANGLES ±3°	DWN WEI 16 OCT2012	**HAOGUO XING YE SHARE CO.,LTD.**
	CHK	
	APVD	NAME: Board To Board Connector Pitch 0.50mm Female H=2.10mm
MATERIAL: SEE NOTE	PRODUCT SPEC	
FINISH: SEE NOTE	APPLICATION SPEC	SIZE: A3 / DRAWING NO: J13−0035 / RESTRICTED TO: −
PROJECTION	DIMENSIONS: MM	CUSTOMER DRAWING / SCALE: − / SHEET 1 OF 1 / REV R3