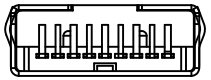

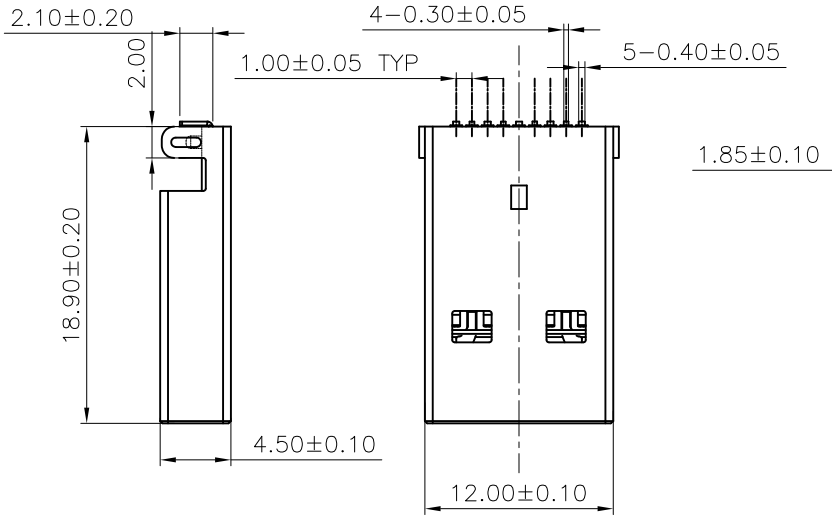

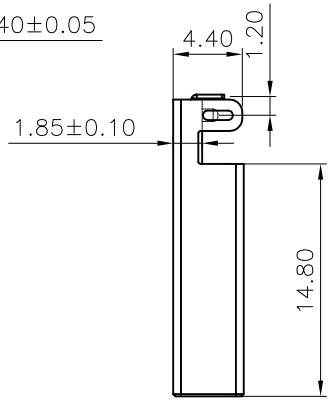

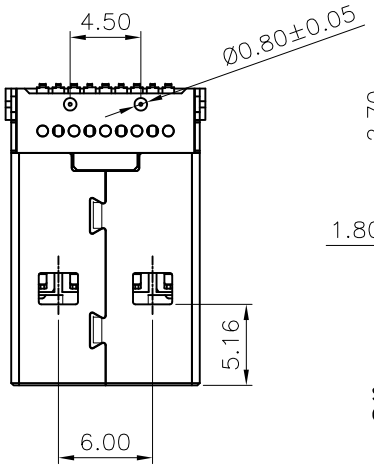

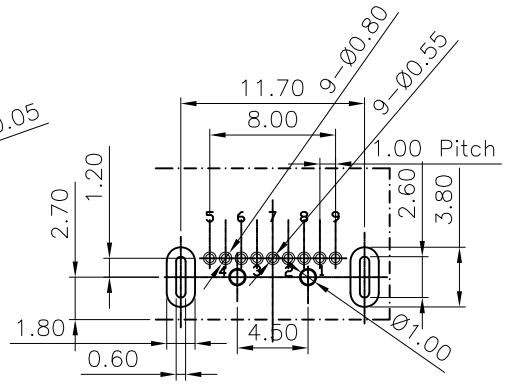

PCB Layout

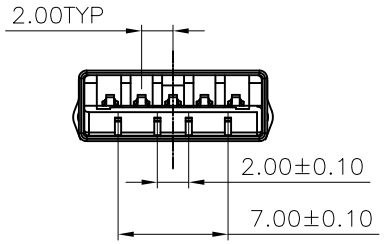

Pin NUMBER	SIGNAL NAME
1	VBUS
2	D-
3	D+
4	GND
5	StdA_SSRX-
6	StdA_SSRX+
7	GND_DRAIN
8	StdA_SSTX-
9	StdA_SSTX+
Shell	Shield

SPECIFCATIONS:
Contact current Rating:
1.8 Amperes for pin1&pin4.
0.25 Amperes other contacts
Dielectric Withstanding Voltage:AC 100V(RMS)
Insulation resistance:100Megohms Minimum.
Contact Resistance:
30mΩ Max for pin1&pin4
50mΩMax for other contacts
Mechanical Characteristics:
Mating Force:35 Newtoms.Maximum
Unmating Force:10 Newtoms.MInimum.
8N Min After Durability
operating Temperature:-55°to+85°

MATERIAL:
Housing: LCP+30%GF 94V-0 COLOR:BLUE
Contact: copper alloy(T=0.25mm)
Shell: SPCC
PLATING:
Contact: Au 15U" Plated on contact area
Tin Plated on solder area
Nickel underplating over all
Shell: Nickel Plated

ECN(DCN) NO.	REV.	DATE	DESCRIPTION	CHANGE	APVD
	R2	2013/03/18	REVISED "BACK VIEW" DRAWING	JOHN	
	R1	2013/01/07	NEW	JOHN	

TOLERANCES UNLESS OTHERWISE SPECIFIED
X. ±0.30 X.° ±2°
.X ±0.25 X.X° ±1°
.XX ±0.20
.XXX ±0.15

DWN	JOHN	2013/01/07
CHKD		
APVD		

JS HAOGUO(Zhongxiang) Limited Company

Customers Drawing	TITEL: USB AM 3.0 DIP K脚		
Part NO.	J25-0136-01	Scale	1 : 1
Old Part No.	–	Sheet	1 of 1
UNIT	mm	SIZE	A4

Third Angle Projection